Features

Pb free product—RoHS compliant
Low power consumption, High efficiency
Reliable and rugged
Long life – solid state reliability
Good spectral matching to Si photo detector

Package Dimension

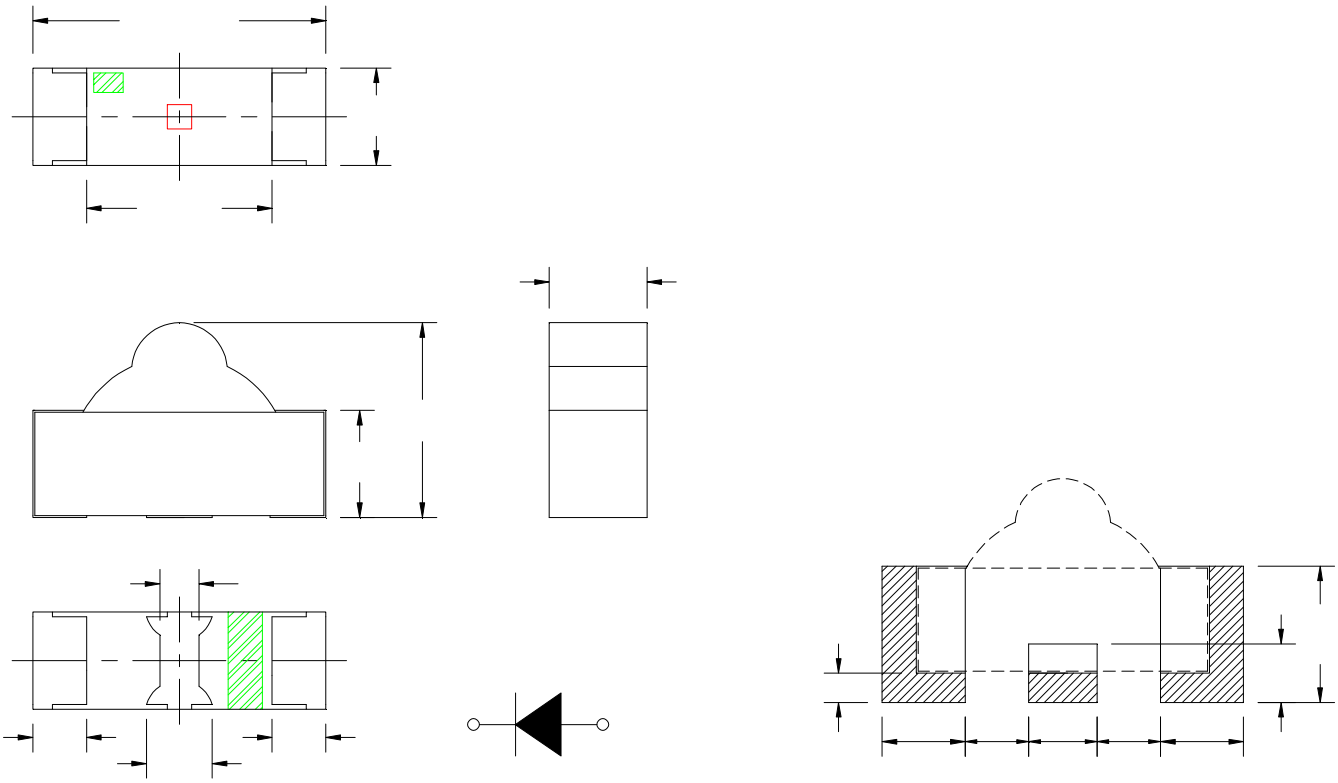

Part NO.	Chip Material	Lens Color
SL-T3010IRC020-L200	AlGaAs	Water Clear

Notes:

1. All dimensions are in millimeters.
2. Tolerance is 0.10mm unless otherwise noted.
3. Specifications are subject to change without notice.

保密

Radiant Intensity Bin Code (I_F=20mA)

BIN CODE	Min. (mW/sr)	Max. (mW/sr)
1	0.8	1.0
2	1.0	1.2
3	1.2	1.44
4	1.44	1.73
5	1.73	2.08

NOTE: The Ie guarantee should be added ±15% tolerance.

Par	**SL-T3010IRC020-L200**

Suggest IR Reflow Condition For Lead Free

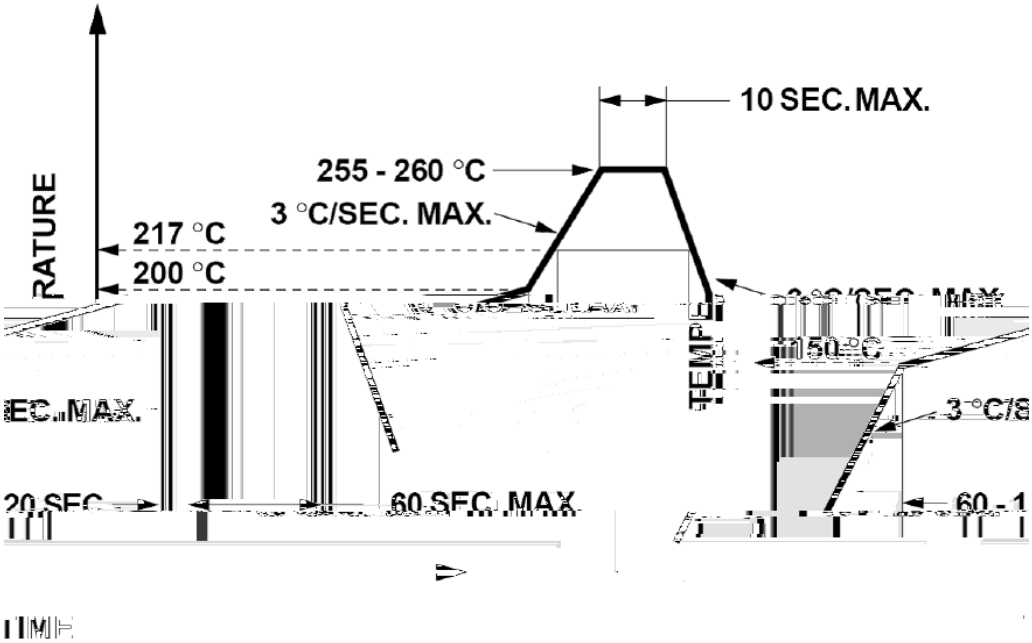

1. Reflow soldering should not be done more than two times.
2. When soldering, do not put stress on the LEDs during heating.

Soldering iron

1. When hand soldering, the temperature of the iron must less than 350 for 3 seconds.
2. The hand solder should be done only once.

Repairing
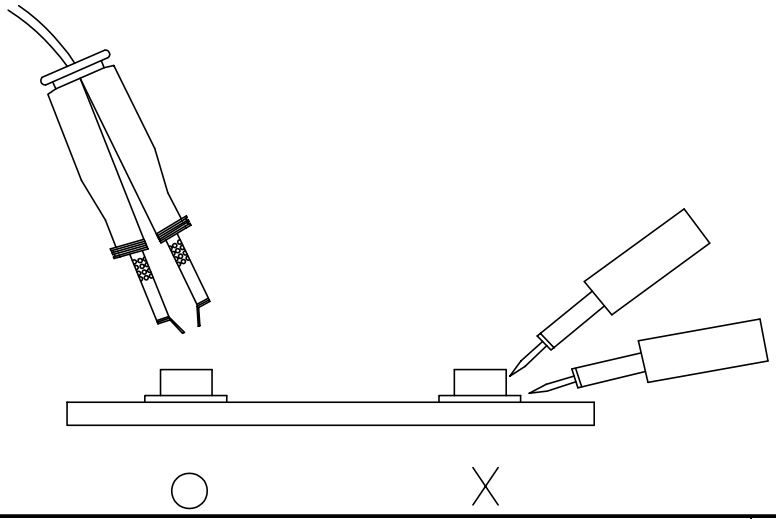
Repair should not be done after the LEDs have been soldered. When repairing is unavoidable, a double-head soldering iron should be used (as below figure). It should be confirmed beforehand whether the characteristics of LEDs will or will not be damaged by repairing.